Technical **Datasheet**

delta-mobrey

Valves & **Manifolds for direct or remote mount**

- **Metal to metal body bonnet seal for high pressure and high temperature sealing.**
- **Unique non-rotating hardened tips – field interchangeable.**
- **316 stainless steel trim.**
- **A 316 stainless steel pin eliminates unauthorised removal of bonnet assy.**
- **Materials of construction can be supplied to meet the requirements of NACE MR-01-75.**
- **Bubble tight metal to metal seat for positive shut off.**
- **Full material traceability of major components.**
- **Positive no slack stem action.**
- **Models V1,V2,V3 and V5 are designed for REMOTE MOUNT for Pressure and Differential Pressure GAUGES, TRANSMITTERS AND SWICTHES**
- **Models V2R, AM and VM are designed for DIRECT MOUNT on Differential Pressure GAUGES and TRANSMITTERS**

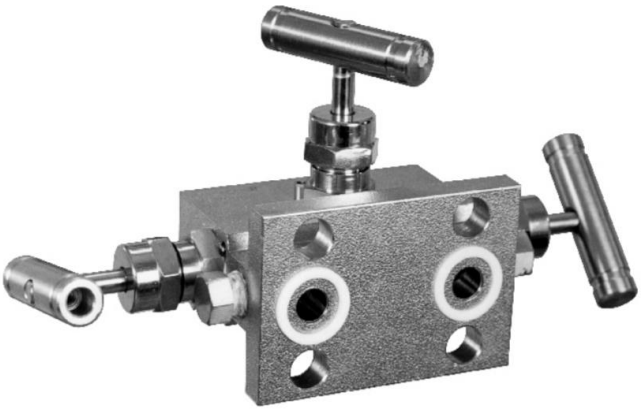

Product **applications**

The Valves & Manifolds are suitable for a wide range of applications in many Industry sectors:

- Oil & Gas
- Chemical
- Power Generation
- Pharmaceutical
- Food & Beverage

The choice of models available ensures that the Valves & Manifolds are suitable for use in:

- Corrosive atmospheres
- Resistant to chemical attack

How can we **help you?**

Delta Mobrey's range of reliable pressure and temperature measurement instruments can be customised to meet individual requirements. For technical advice or to discuss your application please contact us on +44 (0)1252 729 140

V1 Models for DIRECT or REMOTE MOUNT

Picture for reference only. Actual model may differ from model shown.

Needle Valves 6,000 psi & 10,000 psi

The precision made 'V1' model, single isolation hand valve utilising metal to metal seat and body to bonnet connection for superior, bubble tight sealing capabilities at both extreme pressures and temperatures. The "V1" model also offers non rotating hardened tip for extended service life. The unique anti vibration locking pin at the body bonnet connection is for extra safety. Working pressures are 6,000 psi and 10,000 psi. Maximum working temperature up to 240°C and up to 540°C with 004 option at reduced pressure.

Design Features

- For **Pressure Gauges, Switches, Transmitters**
- Bubble tight metal to metal seat for positive shut off.
- Self centering & anti-galling non-rotating hardened tip for first time seal and long service life.
- Piston ring gives dynamic adjustable gland seal in response to pressure change.
- Metal to metal body bonnet seal for high pressure and high temperature sealing.
- Bonnet locking pin. No accidental removal of head unit or loosening due to vibration.
- Bi-directional flow.
- Available NPT, BSPP, BSPT threaded and Socket weld.
- Maximum working temp 240°C (540°C with Graphoil packing option 004)
- Anti-blow out spindle – a major safety feature.
- Secure seal-precision machined to give leak free operation for the life of the valve. Available in either PTFE or Graphoil.
- Full material traceability of major components.
- 100 % Hydrostatic testing.
- Materials of construction can be supplied to meet the requirements of NACE MR-01-75 latest revision.

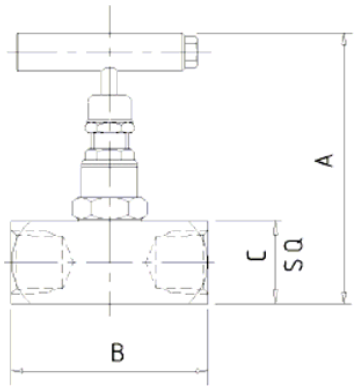

Part Numbers

St / St Part No	Connections size	A	B	C	Weight (kgs)
V1R1A1S	1/4" NPT	3.6	2.1	1.1	0.5
V1R2A1S	3/8" NPT	3.6	2.4	1.1	0.5
V1R3A1S	1/2" NPT	3.6	2.6	1.1	0.5
V1R4A1S	3/4" NPT	3.6	2.9	1.5	0.8
V1R5A1S	1" NPT	3.6	3.2	2.0	1.4

Dimensions in inches

This is not a comprehensive guide to all valves and manifolds available. If an option you require is not shown please contact Delta sales.

V2A model for REMOTE MOUNT

Picture for reference only. Actual model may differ from model shown.

2 Valve Manifold 6,000 psi and 10,000 psi rated

The two-valve isolating and venting manifold used mainly in gauge and static instrument applications such as pressure switches, pressure transmitters and manometers. The angled heads allow for panel mounting. The manifold will isolate instrumentation from the process and allow venting of the instrument for calibration / removal from the circuit without effecting the process / application and or recovery of a sample etc.
Incorporated are all the standard long service life features of the standard 'V1' model needle valve with multi-ring piston style packings. Safe anti-rotational pin locking device.

Design Features

- For **Pressure Gauges, Switches, Transmitters**
- Angled heads allow panel mounting.
- Bubble tight metal to metal seat for positive shut off.
- Self centering & anti-galling non-rotating hardened tip for first time seal and long service life.
- Piston ring gives dynamic adjustable gland seal in response to pressure change.
- Metal to metal body bonnet seal for high pressure and high temperature sealing.
- Bonnet locking pin. No accidental removal of head unit, or loosening due to vibration.
- Bi-directional flow.
- Available NPT, BSPP, BSPT threaded and Socket weld.
- ¼" NPT vent connection.
- Maximum working temp 240°C (540°C with graphoil packing option 004)
- Anti-blow out spindle – a major safety feature.
- Secure seal-precision machined to give leak free operation for the life of the valve. Available in either PTFE or Graphoil.
- Full material traceability of major components.
- 100 % Hydrostatic testing.
- Materials of construction can be supplied to meet the requirements of NACE MR-01-75 latest revision.
- 2 x 9/32" diameter mounting holes included.

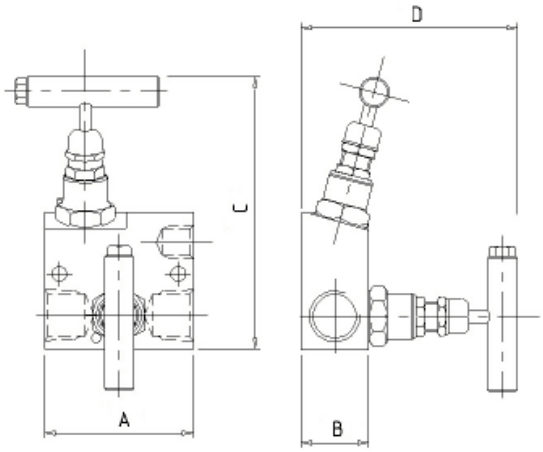

Part Numbers

St / St Part No	Connections Size	A	B	C	D	Weight (kgs)
V2A3A1S	1/2" NPT female x female	2.5	1.1	4.6	3.6	1.0

Dimensions in inches

This is not a comprehensive guide to all valves and manifolds available. If an option you require is not shown please contact Delta sales.

VM2 Models for DIRET or REMOTE MOUNT

Low cost 2 Valve Manifold 6,000 psi rated max.

Robust and reliable construction with all the main characteristics of the V2A series, but with limited in P max. with simplified construction with valves at 90º. Can be used with gauges, switches & transmitters where the maximum pressure does not exceed 400 Bar at ambient temperature. Rating will fall according to the below diagram if temperature increase. The manifold will isolate instrumentation from the process and allow venting of the instrument for calibration / removal from the circuit without effecting the process / application and or recovery of a sample etc. The ¼ "NPT-F vent is supplied not plugged.
Only NPTF connections are available as standard
Safe anti-rotational pin locking device.

Design Features

- For **Pressure Gauges, Switches, Transmitters**
- Angled heads allow panel mounting.
- Self centering & anti-galling non-rotating hardened tip for first time seal and long servicelife.
- Bonnet locking pin. No accidental removal ofhead unit, or loosening due to vibration.
- IN/OUT indicated on the body
- Available NPT as standard BSPP/BSPT on request
- ¼" NPT vent connection
- Teflon packing for Tmax 200 ºC, graphite up to 500 ºC
- Secure seal-precision machined to give leak freeoperation for the life of the valve. Available in either PTFE or Graphite
- Full material traceability of major components.
- 100 % Hydrostatic testing.
- Materials of construction can be supplied to meetthe requirements of NACE MR-01-75

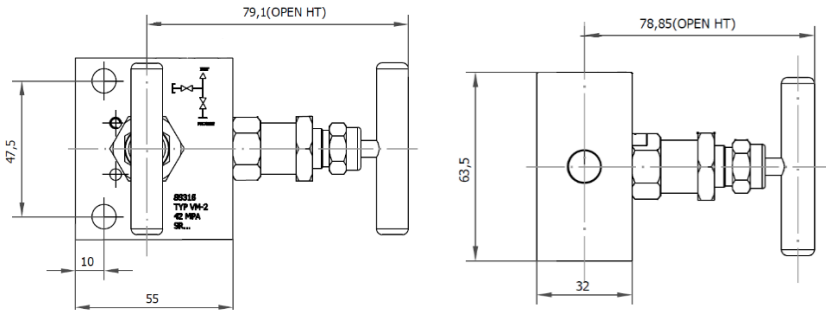

Dimensions in mm

Operating pressure range as a function of temperature

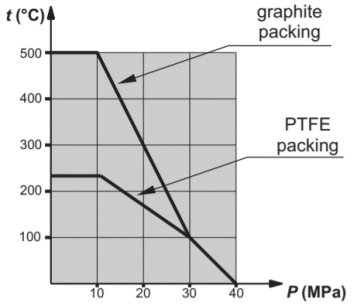

Part Numbers

St / St Part No	Connections Size	Weight (kgs)
VM2 R/R	1/2" NPT F x F	1.0
VM2 R/R/NACE	1/2" NPT F x F	1.0

Dimensions in inches

This is not a comprehensive guide to all valves and manifolds available. If an option you require is not shown please contact Delta sales.

V2R Models for DIRECT MOUNT

In-line 2 Valve Manifold 6,000 psi and 10,000 psi rated

The “V2R” model 2 valve gauge manifold offering single process isolation and controlled venting. Unlike the ‘V2A’ model, the ‘V2R’ model can be offered with male inlet and female outlet connections. Available 6,000 psi and 10,000 psi versions, a slim-line and compact 2 valve manifold (vent port plugged as standard). The ‘V2R’ model, utilises metal to metal seat and body to bonnet connection for superior, bubble tight sealing capabilities at both extreme pressures and temperatures. The “V2R” model also offers non-rotating hardened tip for extended service life. The unique anti-vibration pin locking safety device at the body bonnet connection is for extra safety. Maximum working temperature up to 240°C and up to 540°C with 004 option at reduced pressure. Many options available including hand wheels and locking devices.

Design Features

- For **Pressure Gauges, Switches, Transmitters**
- Self centering & anti-galling non-rotating hardened tip for first time seal and long service life.
- Piston ring gives dynamic adjustable gland seal in response to pressure change.
- Metal to metal body bonnet seal for high pressure and high temperature sealing.
- Bonnet locking pin. No accidental removal of head unit, or loosening due to vibration.
- Bi-directional flow.
- Available NPT, BSPP, BSPT threaded and Socket weld.
- ¼” NPT vent connection.
- Maximum working temp 240°C (540°C with graphoil packing option 004)
- Anti-blow out spindle – a major safety feature.
- Secure seal-precision machined to give leak free operation for the life of the valve. Available in either PTFE or Graphoil.
- Full material traceability of major components.
- 100 % Hydrostatic testing.
- Materials of construction can be supplied to meet the requirements of NACE MR-01-75 latest revision.

V2R3A1S

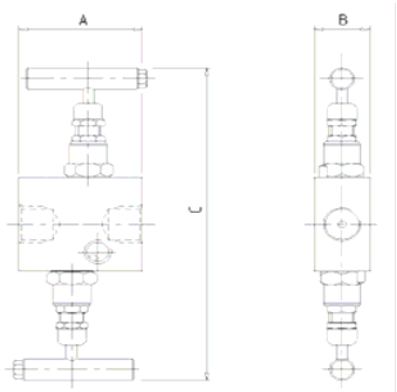

V2R3A2S

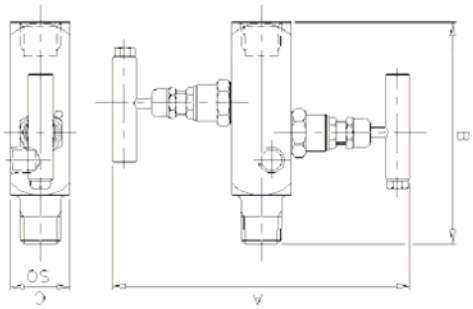

Part Numbers

St / St Part No	Connections Size	A	B	C	Weight (kgs)
V2R3A1S	1/2” NPT female inlet x 1/2” NPT female outlet	2.5	1.1	7.1	0.9
V2R3A2S	1/2” NPT male inlet x 1/2” NPT female outlet	6.3	4.7	1.3	0.9
V2R3A3S	1/2” NPT female inlet x 1/2” NPT male outlet	6.3	4.7	1.3	0.9

Dimensions in inches

This is not a comprehensive guide to all valves and manifolds available. If an option you require is not shown please contact Delta sales.

V2D Model for DIRECT MOUNT

Picture for reference only. Actual model may differ from model shown.

Direct Mount 2 Valve Manifold 6,000 psi rated

Two valve direct mount manifold, designed for use with pressure transmitters. The manifold will isolate instrumentation from the process and allow venting of the instrument for calibration / removal from the circuit without effecting the process / application and or recovery of a sample etc. This compact unit offers single isolation, and vent / test facility. Vent port 1/4" NPT (vent port plugged as standard for safety). Supplied with bolt pack and seal as standard. The V2D can be supplied with additional tapped holes in it's base for mounting purposes. Other options apply such as anti-tamper, lockable vent valve.

Design Features

- For **Pressure Transmitters**
- Bubble tight metal to metal seat for positive shut off.
- Self centering & anti-galling non-rotating hardened tip for first time seal and long service life.
- Piston ring gives dynamic adjustable gland seal in response to pressure change.
- Metal to metal body bonnet seal for high pressure and high temperature sealing.
- Bonnet locking pin. No accidental removal of head unit, or loosening due to vibration.
- Bi-directional flow.
- Available NPT, BSPP, BSPT threaded and Socket weld.
- ¼" NPT vent connection.
- 2 x 5/16" UNF tapped mounting holes.
- Supplied with 7/16" UNF transmitter mounting bolts and seal rings.
- Maximum working temp 240°C (540°C with graphoil packing option 004)
- Anti-blow out spindle – a major safety feature.
- Secure seal-precision machined to give leak free operation for the life of the valve. Available in either PTFE or Graphoil.
- Full material traceability of major components.
- 100 % Hydrostatic testing.
- Materials of construction can be supplied to meet the requirements of NACE MR-01-75 latest revision.

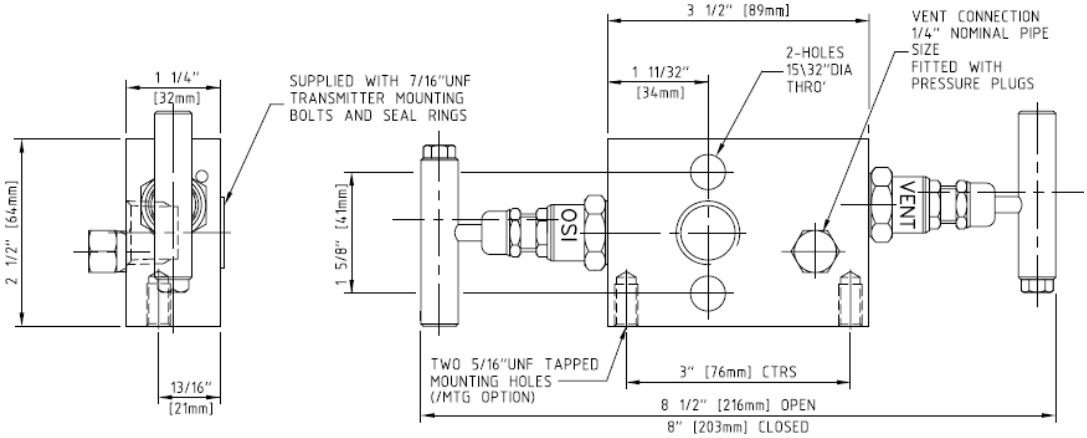

Part Numbers

St / St Part No	Connections Size	Weight (kgs)
V2D3A5S	1/2" NPT Female x flanged	1.4

Dimensions in inches

This is not a comprehensive guide to all valves and manifolds available. If an option you require is not shown please contact Delta sales.

V3R Model for REMOTE MOUNT

Picture for reference only. Actual model may differ from model shown.

Remote Mount 3 Valve Manifold 6,000 psi and 10,000 psi Rated

The three-valve isolation manifold remote mounted (pipe to pipe). Used mainly in differential pressure transmitters and static instrument applications. The V3R has two process isolation valves and one equalisation valve to equalise the two sides. Standard 1/2" inlet x 1/2" outlet. Incorporated all the standard long service life features of the standard "V1" model needle valve with multi-ring piston style packings. Safe anti-rotational pin locking device. Most standard options such as locking devices are available. Process and instrument sides are both on 54mm (2 1/8") centres to correspond with transmitter connections.

Design Features

- For **Differential Gauges, Switches, Transmitters**
- 2 x isolation and 1 equalising valve for instrument balancing applications.
- Bubble tight metal to metal seat for positive shut off.
- Self centering & anti-galling non-rotating hardened tip for first time seal and long service life.
- Piston ring gives dynamic adjustable gland seal in response to pressure change.
- Metal to metal body bonnet seal for high pressure and high temperature sealing.
- Bonnet locking pin. No accidental removal of head unit, or loosening due to vibration.
- Bi-directional flow.
- Available NPT, BSPP, BSPT threaded and Socket weld.
- Maximum working temp 240°C (540°C with graphoil packing option 004)
- Anti-blow out spindle – a major safety feature.
- Secure seal-precision machined to give leak free operation for the life of the valve. Available in either PTFE or Graphoil.
- Full material traceability of major components.
- 100 % Hydrostatic testing.
- Materials of construction can be supplied to meet the requirements of NACE MR-01-75 latest revision.
- 2 x mounting holes as option

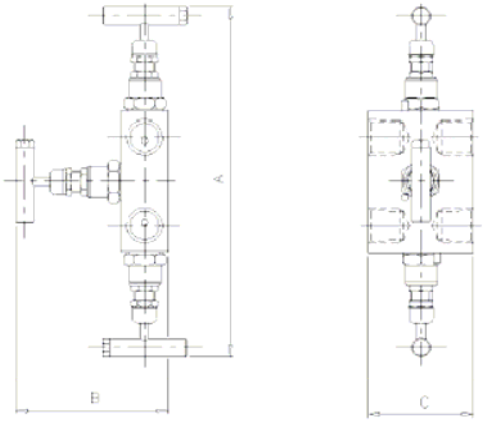

Part Numbers

St / St Part No	Connections Size	A	B	C	Weight (kgs)
V3R3A1S	2 x 1/2" NPT female x female	8.4	3.0	2.5	1.5

Dimensions in inches

This is not a comprehensive guide to all valves and manifolds available. If an option you require is not shown please contact Delta sales.

V3D Model for DIRECT MOUNT

Direct Mount 3 Valve Manifold 6,000 psi rated

Direct mounted three-valve manifold, instrument mount to pipe connection. Offering two isolation valves, and one equalising valve for differential pressure transmitter or static instrument applications. This slim, compact 3-valve manifold offers all the features of the V1's high integrity needle valve head design incorporated in one common instrument manifold block that mounts directly to an instrument.

Design Features

- For **Differential Pressure Switches and Transmitters**
- Bubble tight metal to metal seat for positive shut off.
- Self centering & anti-galling non-rotating hardened tip for first time seal and long service life.
- Piston ring gives dynamic adjustable gland seal in response to pressure change.
- Metal to metal body bonnet seal for high pressure and high temperature sealing.
- Bonnet locking pin. No accidental removal of head unit, or loosening due to vibration.
- Bi-directional flow.
- Available NPT, BSPP, BSPT threaded and Socket weld.
- 4 x 7/16" UNF bolts for mounting to transmitter.
- 2 x PTFE/Graphoil seal rings for transmitter flange.
- Maximum working temp 240°C (540°C with graphoil packing option 004)
- Anti-blow out spindle – a major safety feature.
- Secure seal-precision machined to give leak free operation for the life of the valve. Available in either PTFE or Graphoil.
- Full material traceability of major components.
- 100 % Hydrostatic testing.
- Materials of construction can be supplied to meet the requirements of NACE MR-01-75 latest revision.
- ¼" NPT plugged vent connection option.

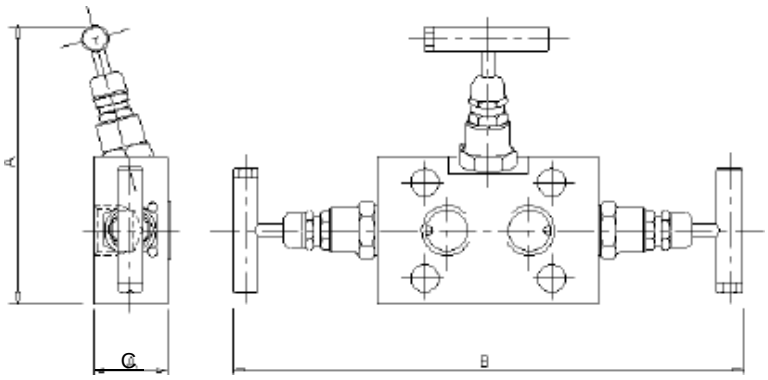

Dimensions in inches

Part Numbers

St / St Part No	Connections Size	A	B	C	Weight (kgs)
V3D3A5S	2 x ½" NPT female x direct mount	4.7	8.6	1.2	1.5

Dimensions in inches

This is not a comprehensive guide to all valves and manifolds available. If an option you require is not shown please contact Delta sales.

VM-3 Models for DIRECT MOUNT

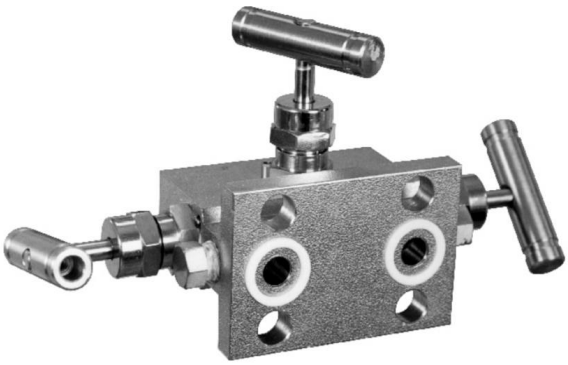

Direct mount 3 valve manifold, flanged type 6,000psi rated max

Direct mounted three-valve manifold, flanged instrument side, threaded process side. Offering two isolation valves, and one equalizing valve. Used in differential pressure transmitters.
Standard 2 x 1/2" inlet x direct mount with 2 x 1/4" not plugged vent port supplied for free use by the customer.
Safe anti-rotational pin locking device. Most standard options such as locking devices are available

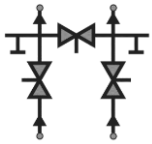

Design Features

- For **Differential Pressure Transmitters**
- Self centering and Non-rotating hardened tip for first time seal and long service life.
- Piston ring gives dynamic adjustable gland seal in response to pressure change.
- Metal to metal body bonnet seal for high pressure and high temperature sealing.
- Bonnet locking pin. No accidental removal of head unit, or loosening due to vibration.
- Available NPT. BSPP/BSPT as special construction in request.
- Standard 4xM10 for limited pressure up to 250bar (code /A) or optional 4 x 7/16" UNF bolts for mounting to transmitter (code /B) .
- 2 x PTFE seal rings for transmitter flange.
- Maximum working temp 200°C (500°C with graphite packing)
- Secure seal-precision machined to give leak free operation for the life of the valve. Available in either PTFE or Graphite.
- Full material traceability of major components.
- Materials of construction can be supplied to meet the requirements of NACE MR-01-75 latest revision.

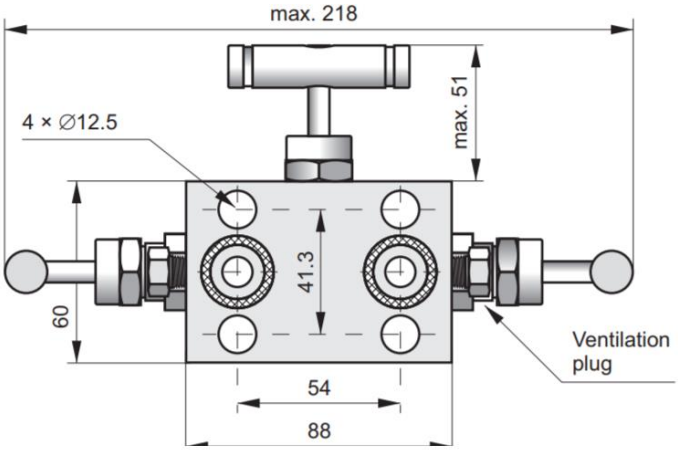

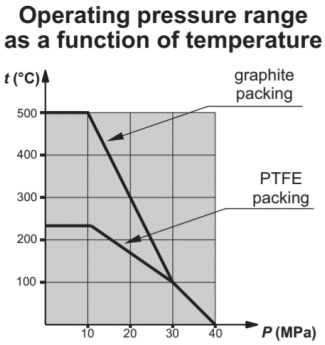

Dimensions in mm

Part Numbers

St / St Part No	Connections Size	Weight (kgs)
VM-3/A	2 x ½" NPT female x direct mount 2 x ¼" NPT vents +4xM10 bolts + Teflon seals	1.8
VM-3/NACE/A	2 x ½" NPT female x direct mount 2 x ¼" NPT vents +4xM10 bolts + Teflon seals	1.8

This is not a comprehensive guide to all valves and manifolds available. If an option you require is not shown please contact Delta sales.

AM-413 Models for DIRECT MOUNT

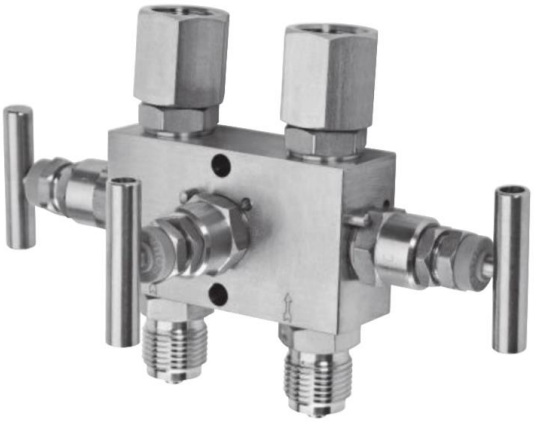

Direct mount 3 valve manifold specific for DIFFERENTIAL PRESSURE GAUGES series DG/DA, flanged type 6,000psi rated max

Direct mounted three-valve manifold, complete of swivel connection instrument side, threaded process side. Offering two isolation valves, and one equalizing valve. Used in differential pressure gauges.
Standard 2 x 1/2" NPTM inlet x 2 x 1/2" GF swivel.
The ½"G female thread on instrument side, offers the best alignment instrument/manifold. Foresee ½"GM process connection on the Differential pressure Gauge.
Safe anti-rotational pin locking device.

Design Features

- For **Differential Pressure Gauges**
- Hardened tip for first time seal and long service life.
- Metal to metal body bonnet seal for high pressure and high temperature sealing.
- Bonnet locking pin. No accidental removal of head unit, or loosening due to vibration.
- Available NPT. BSPP/BSPT on request.
- Body in 316LSS, handle in 304SS
- Maximum working temp 210°C (500°C with graphite packing)
- Secure seal-precision machined to give leak free operation for the life of the valve. Available in either PTFE or Graphite.
- Full material traceability of major components.
- Materials of construction can be supplied to meet the requirements of NACE MR-01-75 latest revision.

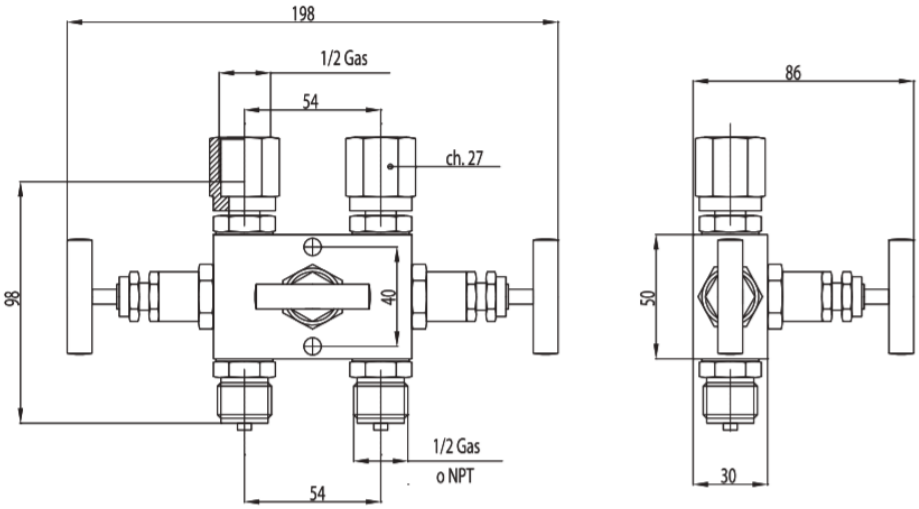

Dimensions in mm

Part Numbers

St / St Part No	Connections Size	Weight (kgs)
AM-413	2 x ½" NPT male x 2x ½" GF Swivel	1.7

This is not a comprehensive guide to all valves and manifolds available. If an option you require is not shown please contact Delta sales.

V5R Model for REMOTE MOUNT

Remote Mount 5 Valve Manifold 6,000 psi and 10,000 psi Rated

The five-valve isolation manifold remote mounted (pipe to pipe) is used mainly in differential pressure transmitters and static instrument applications. The V5R has Offering two isolation valves, two vent valves and one equalising valve. Standard 1/2" inlet x 1/2" outlet. Incorporated all the standard long service life features of the standard "V1" model needle valve with multi- ring piston style packings. Safe anti-rotational pin locking device. Most standard options such as locking devices are available.
Process and instrument sides are both on 54mm (2 1/8") centres to correspond with transmitter connections.

Design Features

- For **Differential Gauges, Switches, Transmitters**
- 2 x isolation, 2 x vent and 1 equalising valve for instrument balancing applications.
- Bubble tight metal to metal seat for positive shut off.
- Self-centering & anti-galling non-rotating hardened tip for first time seal and long service life.
- Piston ring gives dynamic adjustable gland seal in response to pressure change.
- Metal to metal body bonnet seal for high pressure and high temperature sealing.
- Bonnet locking pin. No accidental removal of head unit or loosening due to vibration.
- Bi-directional flow.
- Available NPT, BSPP, BSPT threaded and Socket weld.
- Maximum working temp 240°C (540°C with graphoil packing option 004)
- Anti-blow out spindle – a major safety feature.
- Secure seal-precision machined to give leak free operation for the life of the valve. Available in either PTFE or Graphoil.
- Full material traceability of major components.
- 100 % Hydrostatic testing.
- Materials of construction can be supplied to meet the requirements of NACE MR-01-75 latest revision.
- 2 x mounting holes as option

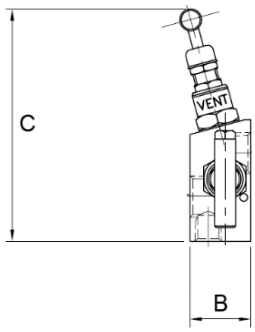

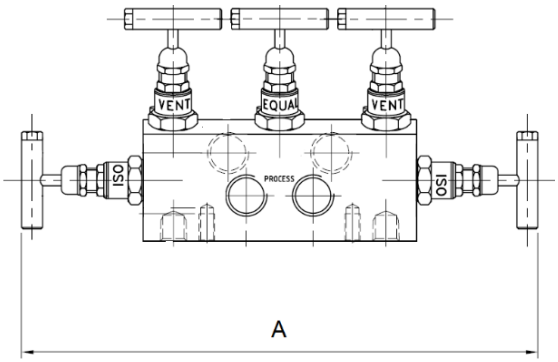

Part Numbers

St / St Part No	Connections Size	A	B	C	Weight (kgs)
V5R3A1S	2 x 1/2" NPT female x female	10.6	1.3	4.8	2.3

Dimensions in inches

V5D Model for DIRECT MOUNT

Picture for reference only. Actual model may differ from model shown.

Direct mount 5 valve manifold 6,000 psi rated

Direct style block mounted five-valve manifold, instrument mount to pipe connection. Offering two isolation valves, two vent valves and one equalising valve. Used in differential pressure transmitters and static instrument applications. Standard 2 x 1/2" inlet x direct mount with 2 x 1/4" plugged vent port supplied plugged. This slim, compact valve incorporates all the standard long service life features of the standard "V1" model needle valve with multi-ring piston style packings. Safe anti-rotational pin locking device. Most standard options such as locking devices are available. All additional ports supplied plugged as standard.

Design Features

- For **Differential Pressure switches and Transmitter**
- Bubble tight metal to metal seat for positive shut off.
- Self centering & anti-galling non-rotating hardened tip for first time seal and long service life.
- Piston ring gives dynamic adjustable gland seal in response to pressure change.
- Metal to metal body bonnet seal for high pressure and high temperature sealing.
- Bonnet locking pin. No accidental removal of head unit, or loosening due to vibration.
- Bi-directional flow.
- Available NPT, BSPP, BSPT threaded and Socket weld.
- 4 x 7/16" UNF bolts for mounting to transmitter.
- 2 x PTFE/Graphoil seal rings for transmitter flange.
- Maximum working temp 240°C (540°C with graphoil packing option 004)
- Anti-blow out spindle – a major safety feature.
- Secure seal-precision machined to give leak free operation for the life of the valve. Available in either PTFE or Graphoil.
- Full material traceability of major components.
- 100 % Hydrostatic testing.
- Materials of construction can be supplied to meet the requirements of NACE MR-01-75 latest revision.
- ¼" NPT plugged vent connection option.

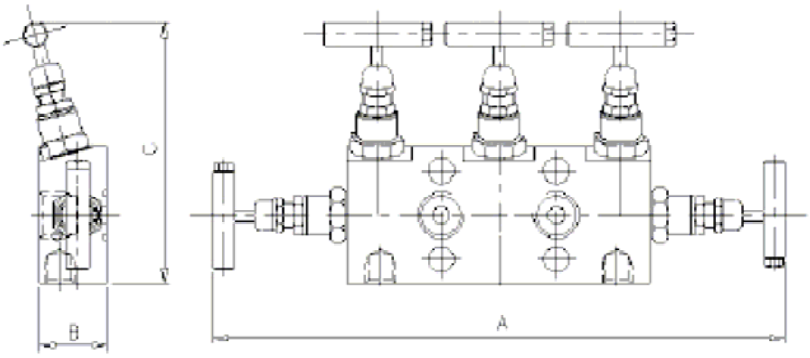

Part Numbers

St / St Part No	Connections Size	A	B	C	Weight (kgs)
V5D3A5S	2 x ½" NPT female x direct mount 2 x ¼" NPT vents	10.6	1.3	4.8	2.3

Dimensions in inches

This is not a comprehensive guide to all valves and manifolds available. If an option you require is not shown please contact Delta sales.

VM-5 Models for DIRECT MOUNT

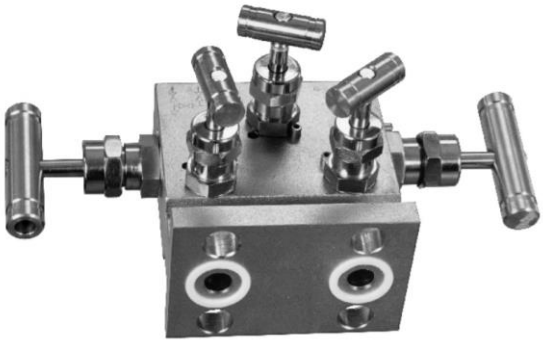

Direct mount 5 valve manifold, flanged type 6,000psi rated max

Direct mounted five-valve manifold, flanged instrument side, threaded process side. Offering two isolation valves, two vent valves and one equalizing valve. Used in differential pressure transmitters.
Standard 2 x 1/2” inlet x direct mount with 2 x 1/4” not plugged vent port supplied for free use by the customer.
Safe anti-rotational pin locking device. Most standard options such as locking devices are available

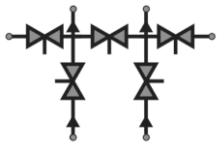

Design Features

- For **Differential Pressure Transmitter**
- Self centering & anti-galling non-rotating hardenedtip for first time seal and long service life.
- Piston ring gives dynamic adjustable gland seal in response to pressure change.
- Metal to metal body bonnet seal for high pressure and high temperature sealing.
- Bonnet locking pin. No accidental removal of head unit, or loosening due to vibration.
- Available NPT. BSPP/BSPT as special construction in request.
- Standard 4xM10 for limited pressure up to 250bar (code /A) or optional 4 x 7/16” UNF bolts for mounting to transmitter (code /B) .
- 2 x PTFE seal rings for transmitter flange.
- Maximum working temp 200°C (500°C with graphite packing)
- Secure seal-precision machined to give leak free operation for the life of the valve. Available in either PTFE or Graphite.
- Full material traceability of major components.
- Materials of construction can be supplied to meet the requirements of NACE MR-01-75 latest revision.

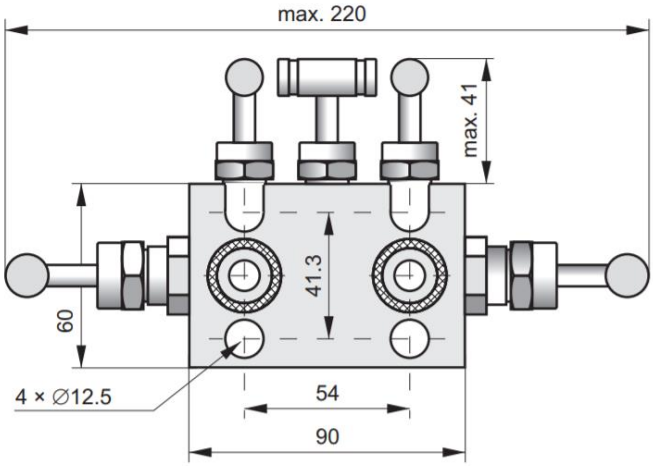

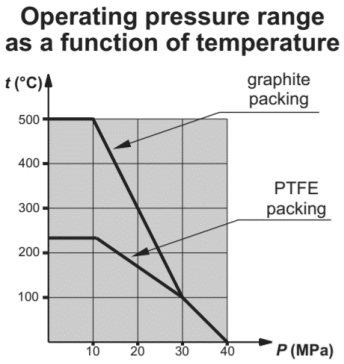

Dimensions in mm

Part Numbers

St / St Part No	Connections Size	Weight (kgs)
VM-5/A	2 x ½” NPT female x direct mount 2 x ¼” NPT vents +4xM10 bolts + Teflon seals	2.54
VM-5/NACE/A	2 x ½” NPT female x direct mount 2 x ¼” NPT vents +4xM10 bolts + Teflon seals	2.54

This is not a comprehensive guide to all valves and manifolds available. If an option you require is not shown please contact Delta sales.

AM-417 Models for DIRECT MOUNT

Direct mount 5 valve manifold specific for DIFFERENTIAL PRESSURE GAUGES series DG/DA, flanged type 6,000psi rated max

Direct mounted five-valve manifold, complete of swivel connection instrument side, threaded process side. Offering two isolation valves, two vent valves and one equalizing valve. Used in differential pressure gauges.
Standard 2 x 1/2" NPTM inlet x 2 x 1/2" GF swivel.
The ½"G female thread on instrument side, offers the best alignment instrument/manifold. Foresee ½"GM process connection on the Differential pressure Gauge.
Safe anti-rotational pin locking device.

Design Features

- For **Differential Pressure Gauges**
- Hardened tip for first time seal and long service life.
- Metal to metal body bonnet seal for high pressure and high temperature sealing.
- Bonnet locking pin. No accidental removal of head unit, or loosening due to vibration.
- Available NPT. BSPP/BSPT on request.
- Body in 316LSS, handle in 304SS
- Maximum working temp 210°C (500°C with graphite packing)
- Secure seal-precision machined to give leak free operation for the life of the valve. Available in either PTFE or Graphite.
- Full material traceability of major components.
- Materials of construction can be supplied to meet the requirements of NACE MR-01-75 latest revision.

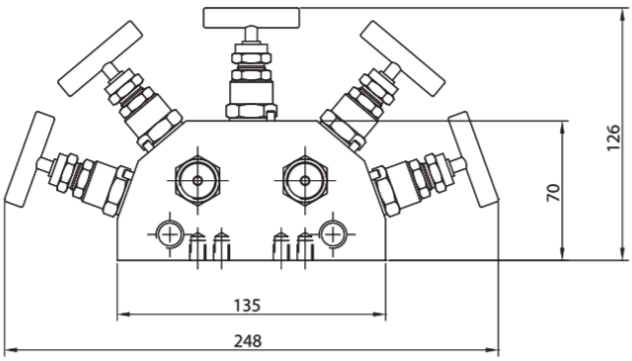

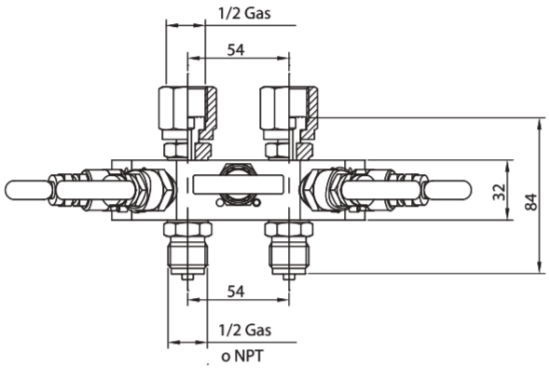

Dimensions in mm

Part Numbers

St / St Part No	Connections Size	Weight (kgs)
AM-417	2 x ½" NPT male x 2x ½" GF Swivel	2.8

This is not a comprehensive guide to all valves and manifolds available. If an option you require is not shown please contact Delta sales.

delta-mobrey
Delta Mobrey Limited
Hudson House, Albany Park Camberley Surrey, GU16 7PL, UK.
T44 (0)1252 729 140 **F**+44 (0)1252 729 168 **E** sales@delta-mobrey.com **W** www.delta-mobrey.com