Operating Instructions
IP4001, Rev CA
March 2018

Mobrey™ Series VLS

Vibrating Level Switch

delta-mobrey

Contents

1.0 Introduction

1.1 Overview

Mobrey vibrating rod level switches are suitable for low and high level indication of granules and powders with a minimum 0.05 kg/dm^3 density such as cement, lime, sand, grain, feed, sugar, etc. Dust Ex versions are available for using the instrument in an explosion-proof environment.

The vibrating rod is a mechanical resonant system, excited and kept in resonance by an electronic unit. The medium to be measured, when reaching the vibration rod end, will damp the vibration. The change in vibration intensity is sensed by an electronic unit, which, upon the elapse of the delay time, actuates the output circuit.

1.2 Accessories

- User manual (IP4001)
- 2 off 3-pole terminal blocks
- 1½-in, sealing, for BSP only
- 2 off M20x1.5 cable glands

1.3 Order code

K Standard model with 1 x SPDT alarm relay

H[1] High temperature model with 1 x SPDT relay (not available with Extended Cable option)

- B R 1½-in. BSPT mounting
- N 1½-in. NPT mounting
  - 1 Standard length rod, 207 mm insertion length
  - 3 Extended rod, 300-3000 mm insertion length
  - 4 Cable extended, 1000-20000 mm insertion length
    - 3 Aluminum Alloy housing, powder coated
    - 9 As code 3, but with Remote Electronics
      - 1Z 20-255 Vac / Vdc, no hazardous area approval
      - 5A 20-250 Vac / 20-50 Vdc, ATEX Dust Certification II 1/2 D
        - /**** State rod or cable extension length in mm

1. Only for standard and rod extended versions.

1.4 Dimensions

Figure 1-1. Mobrey Series VLS Dimensions

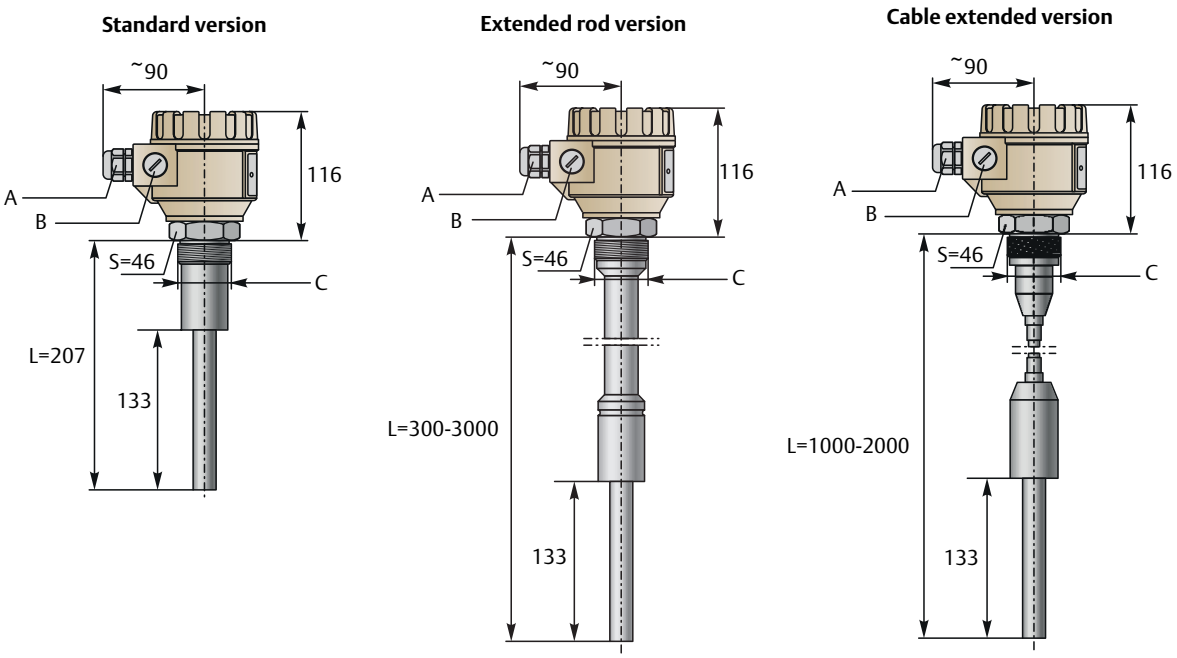

A. 2 off M20x1.5 conduit entries
B. 2 off NPT 1/2-in. conduit entries
C. 1 1/2-in. BSP or NPT threaded process connection

Dimensions are in mm.

2.0 Installation

When installed in a potentially explosive atmosphere, reference should be made to IP4001/SI.

Prior to installation, it is advisable to check the switching function for proper adjustment on a sample quantity of material (see "Adjustments" on page 6). The unit may not work with mediums that are within the specified density range, but have very large granules or have too little friction.

⚠WARNING

Handle the device with great care, especially the sensing probe. Any impact on the sensing probe may ruin its resonance system. A protective shield should be installed (see inset, right) if the probe is exposed to falling material or an excessive mechanical load.

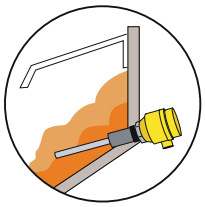

Screw in the device by its hexagon neck. After screwing tight the process connection, the housing can be rotated (up to maximum of 300°), to adjust the cable gland to the required position.

It might be necessary to install the device at an offset level position relative to the switching level actually required, taking into account caving or arching of the material in the silo (see Figure 1-2).

Figure 1-2. Examples of Correct and Incorrect Installations

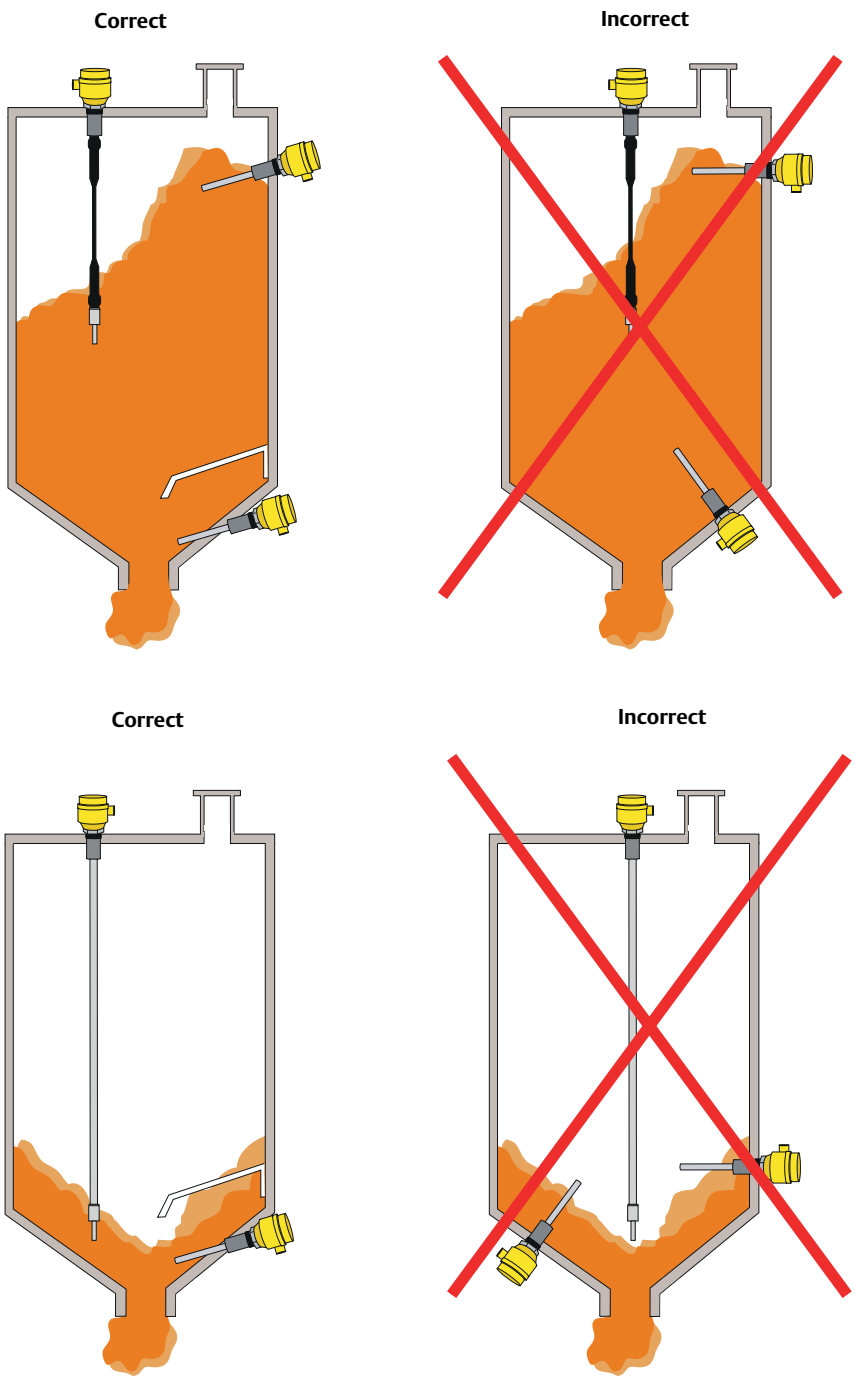

With powder level detection, the device should be installed at an inclination exceeding the angle of repose (or vertically in case of high level detection), to prevent powder deposition on the vibrating rod that might substantially reduce the self-cleaning effect. Avoid mounting the rod in a recess (Figure 1-3)

Figure 1-3. Avoid Mounting Rod in Recess

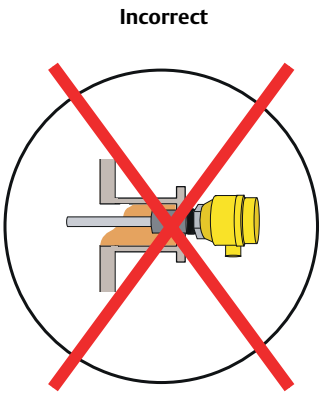

In the case of tanks that are likely to be exposed to intense vibrations, necessary provisions shall be made for damping the vibrations acting on the device (e.g. vibration damping inserts made of rubber have to be applied).

Figure 1-4. Maximum Torque and Force

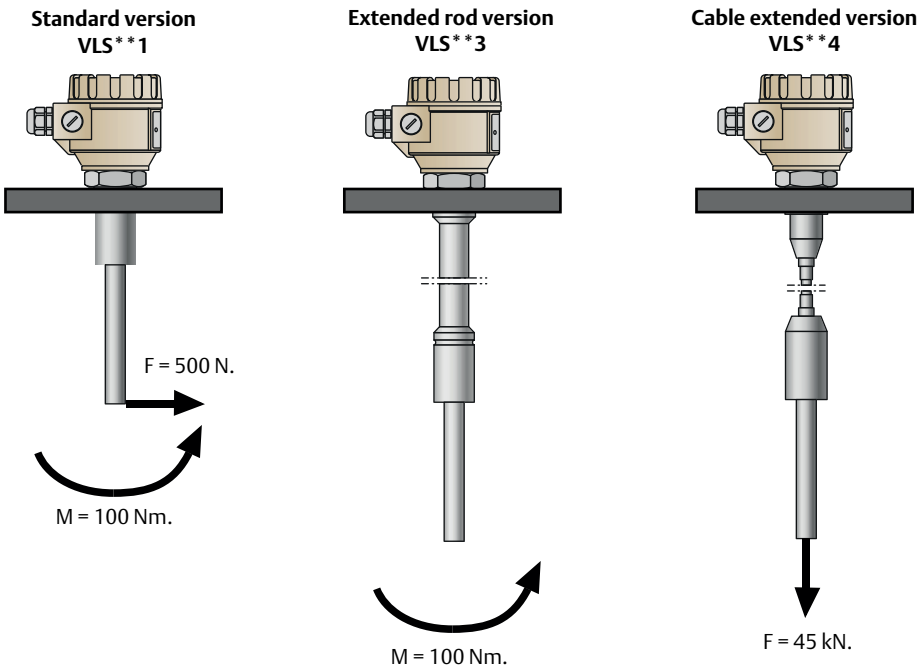

3.0 Adjustments

⚠ WARNING

The enclosure must not be opened when the equipment is electrically energized.

Remove the top cover of the housing to access the connection terminals and adjusting switches. In case of Dust Ex instruments, the housing cover can only be opened after the removal of the cover securing clamp.

Do not remove the wire from terminal pin 1 (Figure 1-5 on page 7) as it is an internal connection. For grounding the unit, use the PE grounding screw terminal PE.

After correct installation, the electrical connections established, the housing cover fitted and secured, the device is ready for operation. The switched-on state is indicated by the lighting of the LED.

The DENSITY setting (switch A) is to be set in accordance with the material density:

- LOW position
  - Recommended for loose and light materials with density below 0.1 kg/dm^3.
  - Represents small energy and amplitude of vibration as well as great sensitivity of detection.
- HIGH position
  - Recommended for (thick and heavy) materials with density over 0.1 kg/dm^3.
  - Represents vibration with great energy and amplitude, and small sensitivity of detection.

The instrument may not switch correctly in mediums with a density of less than 0.05 kg/dm^3 or with very small internal friction.

To obtain FAIL SAFE alarm (switch C), use the de-energized state of the output as an alarm. A power breakdown will then also be considered to be an alarm (see Table 1-1 on page 7).

The delay (switch B) is to be selected to comply with requirements of the process control technology the unit is used for. Standard (switching delay is ~5 seconds) or fast response (switching delay is ~2 seconds) can be selected.

Note
When operating the switches, standard electrostatic discharge precautions should be taken to avoid damaging the instrument.

Figure 1-5. Electrical Connections

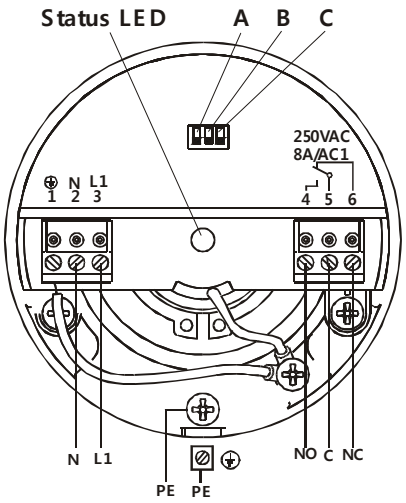

Table 1-1. Operation

Power	Probe	Fail-safe mode	LED	Relay
On	Not vibrating (covered)	Low	Green	Energized
		High	Red	De-energized
	Vibrating (free)	Low	Red	De-energized
		High	Green	Energized
Fails		Low or high	Not lit	De-energized

4.0 Maintenance

Mobrey Series VLS devices do not require maintenance on a regular basis. In some instances, however, the vibrating section may need a cleaning from deposited material. This must be carried out gently, without harming the vibrating section of the vibrating rod.

Repairs during or after the guarantee period are affected by **Delta Mobrey.** Equipment sent back for repairs must always be cleaned or neutralized (disinfected) by the user.

5.0 Specifications

Table 1-2. Specifications for Standard, Rod Extended, and Cable Extended Versions

Category	Standard	Rod extended	Cable extended
Probe length	207 mm	0.3 to 3 m	1 to 20 m
Wetted-parts materials	1.4571		Probe: 1.4571 Cable: PE coated
Housing material	Aluminum: Powder paint coated		
Process connection	1½-in. BSP or 1½-in. NPT		
Operating temperature ranges	See Figure 1-6 and Table 1-3		
Maximum pressure (absolute)	25 bar (2.5 MPa)		6 bar (0.6 MPa)
Minimum medium density[1]	0.05 kg/dm³ (maximum granular size: 10 mm)		
Response time (selectable)	Not vibrating (covered): < 1.8 seconds or 5±1.5 seconds		
	Vibrating (free): < 2 seconds or 5±1.5 seconds		
Supply voltage (universal)	Normal type: 20...255 Vac/Vdc		
	Ex type: 20...250 Vac (50/60 Hz) or 20...50 Vdc		
Power consumption	≤ 2.5 VA, 2 W		
Electrical connections	2 pcs. M20x1.5 cable glands with ta IIIC protection type or for normal types M20x1.5 plastic glands for cable Ø 6 to 12 mm, 2 pcs. plug-in type terminal blocks for 0.25 to 1.5 mm2 wire cross section internal thread for 2x ½-in NPT cable protection pipe		
Output	SPDT (potential free), 250 Vac, 8 A, ac 1		
Ingress protection	IP67 (NEMA6) EN 60529:2001		
Electrical protection	Class I. (to be grounded)		
Ex protection mark	ATEX: Ex II 1/2 D Ex ta/tb IIIC T90 °C... T170 °C Da/Db		
Weight (with extension)	1.88 kg	1.88 kg (+1.4 kg/m)	1.88 kg (+ 0.6 kg/m)
Storage conditions	Ambient temperature range: -35°C to +60 °C		
	Relative humidity: 98% (maximum)		

1. May depend on friction and granular size of the medium.

Figure 1-6. Ambient (T_A) Versus Process (T_P) Temperatures

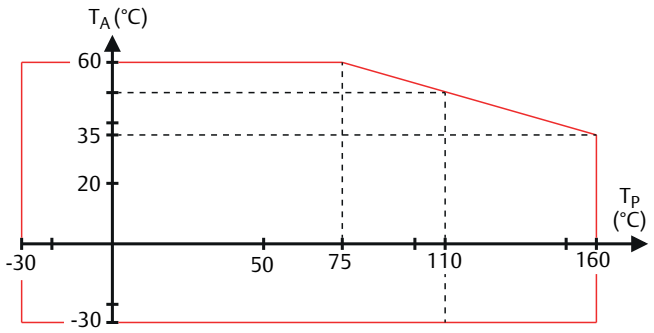

Table 1-3. Thermal Data

	VLS**435A			VLSK*(1/3)35A				VLSH**35A
Process temperature (Tp) (EPL Da – category 1D)	+60 °C	+70 °C	+80 °C... +95 °C [1]	+60 °C	+70 °C	+95°C	+110 °C	+160 °C
Ambient air temperature (Ta) (EPL Db – category 2D)	+60 °C	+50 °C	+60 °C	+60 °C	+50 °C	+60 °C	+50 °C	+35 °C
Maximum surface temperature (process connection)	+85 °C	+85 °C	+95 °C	+85 °C	+85 °C	+95 °C	+95 °C	+135 °C
Maximum surface temperature (T)	+85 °C	+85 °C	+95 °C	+85 °C	+85 °C	+95 °C	+110 °C	+160 °C
T Class	T90°C		T100°C	T90°C		T100°C	T115°C	T170°C

1. The process temperature can reach +95 °C for a maximum period of one hour.

Minimum ambient air temperature (Ta) = –30 °C
Minimum process temperature (Tp) = –30 °C

Head Office (UK)
Delta Mobrey Limited
Riverside Business Park, Dogflud Way,
Farnham, GU9 7SS, UK

+44 (0)1252 729 140
+44 (0)1252 729 168
mobrey@delta-mobrey.com

Linkedin.com/company/delta-mobrey-ltd

Twitter.com/DeltaMobreyUK

Facebook.com/DeltaMobreyUK

Standard Terms and Conditions of Sale can be found at:
www.delta-mobrey.com

delta-mobrey